TAVOLO CON RUOTE

Gae Aulenti, 1980

An industrial trolley used at the FontanaArte plant to transport glass: this was the object that inspired Gae Aulenti to design her Tavolo con Ruote. It is a specimen of intuitive design that skips the drawing board stage and goes straight from the idea of an everyday item to the prototype stage. This wheeled table replaces the factory trolley's wooden shelf with a chunky sheet of beveled glass – a tribute to the company's production history – and fits free-rolling industrial wheels. The nature of the object and its intended use are transformed by replacing just one simple part.

TECHNICAL SHEET

Coffee table. 15 mm cut float-glass top. Industrial wheels with metal forks in optical black finish.

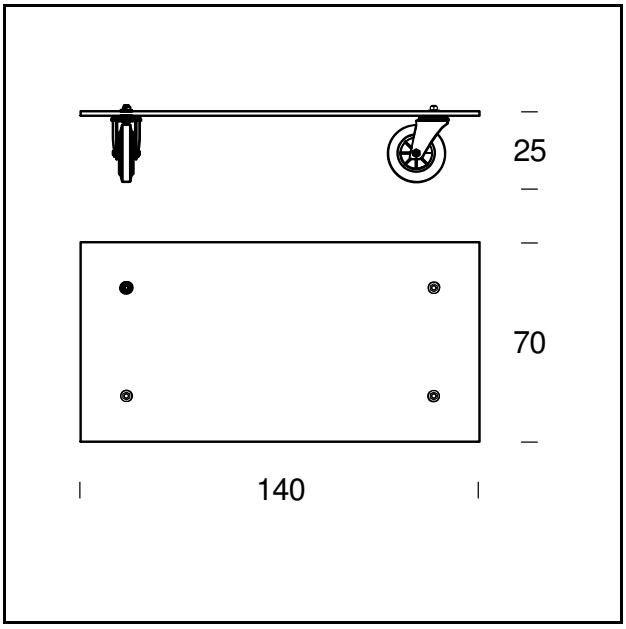

MODEL NAME: Tavolo con Ruote

CODE: 2652

DIMENSIONS: 140 x 70 x 25 cm

MATERIALS: Glass

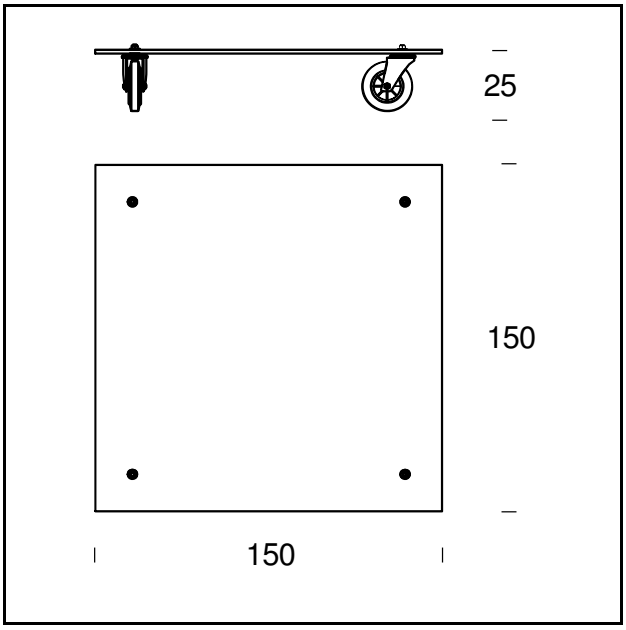

MODEL NAME: Tavolo con Ruote

CODE: 2653

DIMENSIONS: 150 x 150 x 25 cm

MATERIALS: Glass

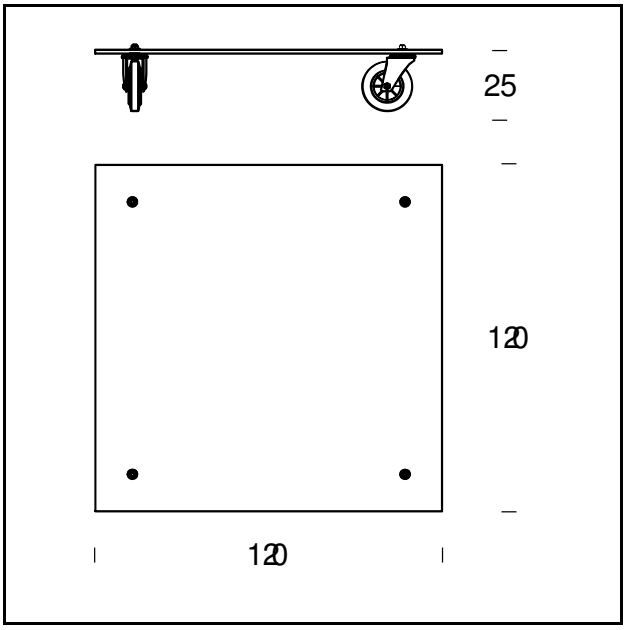

MODEL NAME: Tavolo con Ruote

CODE: 2744

DIMENSIONS: 120 x 120 x 25 cm

MATERIALS: Glass

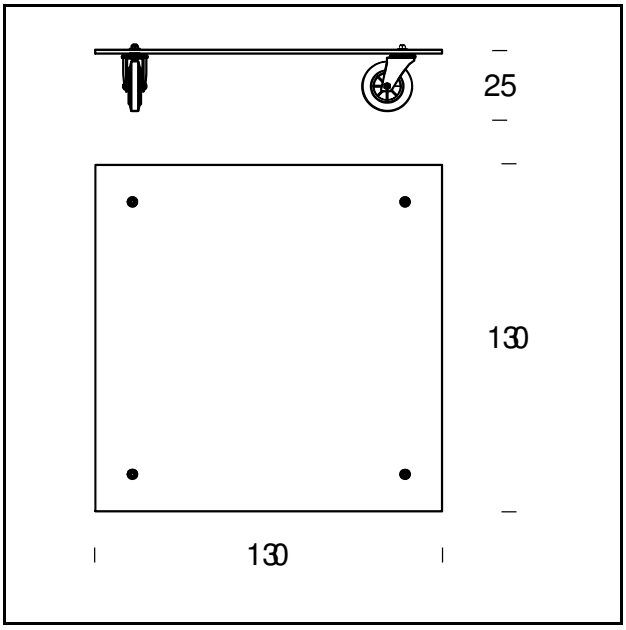

MODEL NAME: Tavolo con Ruote

CODE: 2745

DIMENSIONS: 130 x 130 x 25 cm

MATERIALS: Glass

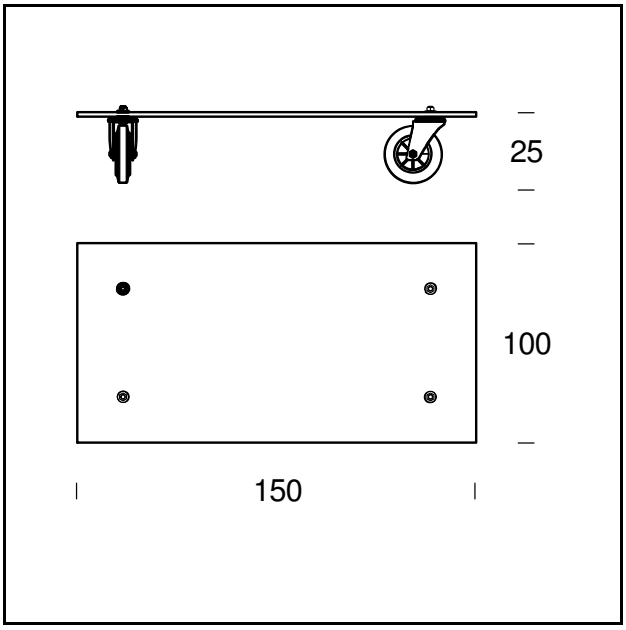

MODEL NAME: Tavolo con Ruote

CODE: 2746

DIMENSIONS: 150 x 100 x 25 cm

MATERIALS: Glass

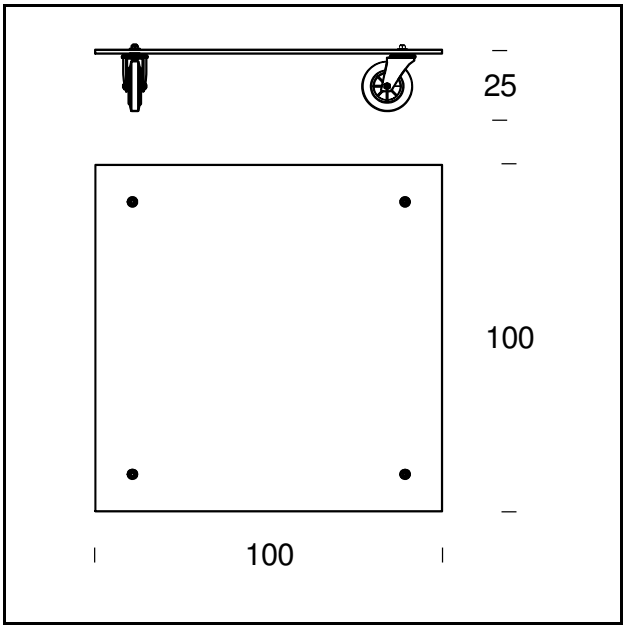

MODEL NAME: Tavolo con Ruote

CODE: 2744/S4

DIMENSIONS: 100 x 100 x 25 cm

MATERIALS: Glass

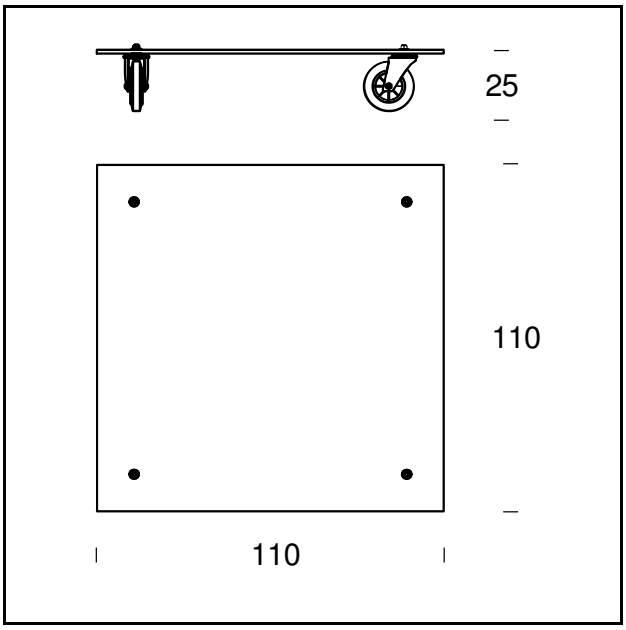

MODEL NAME: Tavolo con Ruote

CODE: 2744/S5

DIMENSIONS: 110 x 110 x 25 cm

MATERIALS: Glass

Subject to technical modifications and modifications to content